IRADION

CORE LASER TECHNOLOGY

OPERATOR'S MANUAL

Infinity Series

CERAMICORE® CO_2 Laser: Models i50 through i150

http://www.iradionlaser.com

Table of Contents

Table of Contents ***2***
Hazard Information ***3***
Terms 3
General Hazards ***3***
General Hazards ***4***
Other Hazards ***4***
Label Locations ***5***
Laser Safety ***6***
Declaration of Conformity ***7***
Declaration of Conformity ***8***
Introduction ***9***
CDRH ***9***
Available Safety Features ***9***
System Overview ***10***
Quick Start Connection Guide ***11***
Power Cable, All Lasers 11
Connector (RJ-45), All Lasers 11
Connector (HD-15) 12
Nominal Operating Voltages 13
“F” Type Lasers 13
“W” Type Lasers 13
Operation of Unit ***14***
Tickle Pulse 15
Laser Command Signals 15
System Test 16
Laser Indicator Lights 16
Water Cooled Laser Connections 17
Water Cooled Laser Connections 18
Condensation 20
Iradion RS232 Com Diagnostics Software ***21***
Specifications ***22***
Technical Drawings - Infinity ***23***
Technical Drawings – Super Infinity ***24***
Troubleshooting ***25***
Indicator Lights Details ***25***

Hazard Information

Hazard information includes terms, symbols, and instructions used in this manual, or on the equipment, to alert both operating and service personnel to the recommended precautions in the care, use, and handling of Class 4 laser equipment.

Terms

Certain terms are used throughout the manual or on the equipment labels. Please familiarize yourself with their definitions and significance.

Danger Imminent hazards which, if not avoided, will result in death or serious injury.

Warning Potential hazards which, if not avoided, could result in death or serious injury.

Caution Potential hazards or unsafe practices which, if not avoided, may result in minor or moderate injury.

General Hazards

Danger – Serious Personal Injury

This Class 4 laser product emits invisible infrared laser radiation at 10.6µm.

Do not allow laser radiation to enter the eye by viewing direct or reflected laser energy. CO_2 laser radiation can be reflected from metallic objects even though the surface is darkened. Direct or diffuse laser radiation can inflict severe corneal injuries leading to permanent eye damage or blindness. All personnel must wear eye protection suitable for 10.6µm CO_2 radiation when in the same area as an exposed laser beam. Eyewear protects against scattered energy but is not intended to protect against direct viewing of the beam.

Never look directly into the laser output aperture or view scattered laser reflections from metallic surfaces.

Enclose the beam path whenever possible. Exposure to direct or diffuse CO_2 laser radiation can seriously burn human or animal tissue, which may cause permanent damage.

This product is not intended for use in explosive, or potentially explosive, atmospheres.

General Hazards

Warning – Serious Personal Injury

U.S. customers should refer to and follow the laser safety precaution described in the American Nation Standards Institute (ANSI) Z136.1-2007 document, Safe Use of Lasers. Procedures listed in this Standard include the appointment of a Laser Safety Officer (LSO), operation of the product in an area of limited access by trained personnel, servicing of equipment only by trained and authorized personnel, and posting of signs warning of the potential hazards.

European customers should appoint a Laser Safety Officer (LSO) who should refer to and follow the laser safety precautions described in EN60825.1-2007, Safety of Laser Products.

Warning – Serious Personal Injury

Materials processing with a laser can generate air contaminates such as vapors, fumes, and/or particles that may be noxious, toxic, or even fatal. Material Safety Data Sheets (MSDS) for materials being processed should be thoroughly evaluated and the adequacy of provisions for fume extraction, filtering, and venting should be carefully considered. Review the following reference for further information: ANSI Z136.1-2007, Safe Use of Lasers.

Warning – Serious Personal Injury

The use of controls or adjustments, or performance of procedures other than those specified herein, may result in hazardous radiation exposure.

Other Hazards

The following hazards are typical for this product family when incorporated for intended use: (A) risk of injury when lifting or moving the unit; (B) risk of exposure to hazardous laser energy through unauthorized removal of access panels, doors, or protective barriers; (C) risk of exposure to hazardous laser energy and injury due to failure of personnel to use proper eye protection and/or failure to adhere to applicable laser safety procedures; (D) risk of exposure to hazardous or lethal voltages through unauthorized removal of covers, doors, or access panels; (E) risk of exposure and/or interference from radio-frequency (RF) electro-magnetic energy

through unauthorized removal of covers, doors, or access panels; (F) generation of hazardous air contaminants that may be noxious, toxic, or even fatal.

Label Locations

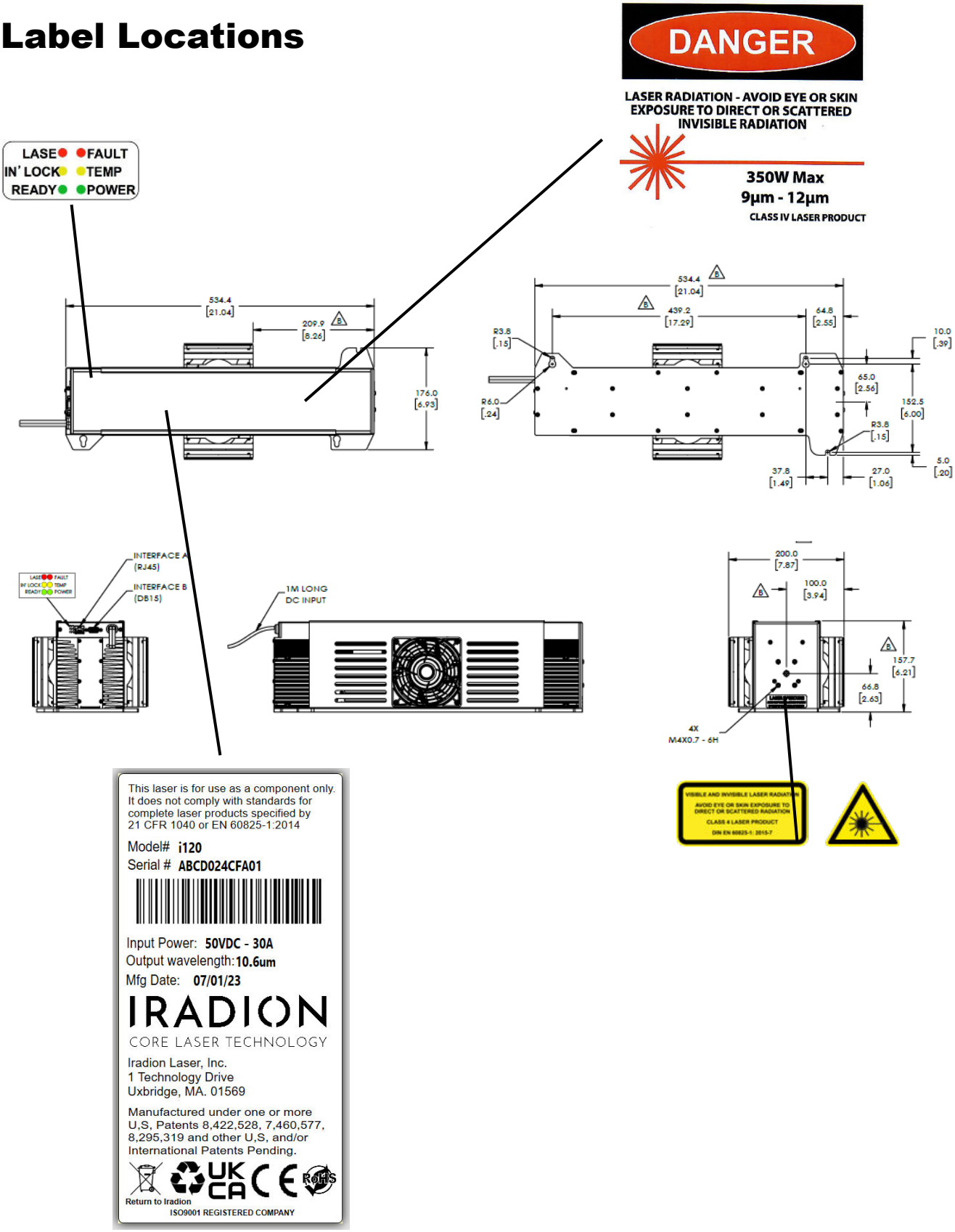

Laser Safety

To prevent exposure to direct or scattered laser radiation, follow all safety precautions specified throughout this manual and exercise safe operating practices per ANSI Z136.1-2007 at all times when actively lasing.

Always wear approved Laser Safety Glasses with a minimum OD (Optical Density) 4.27 for a wavelength of 10.6µm.

A CO_2 laser is capable of igniting most materials under the proper conditions. Never operate the laser in the presence of flammable or explosive materials, gases, liquids, or vapors.

IEC 60825-1 MPE (Maximum Permissible Exposure) = 1.00e-1 NOHD (Nominal Ocular Hazard Distance) = 4.51e+2

NOTICE

The output aperture comes covered by a clearly marked dust guard that must be removed before use. Firing the laser through the cover **WILL** cause permanent destruction of the laser.

Declaration of Conformity

When integrating Iradion's Infinity Series Lasers, the Buyer and/or integrator of the end system is responsible for meeting all applicable Standards to obtain the CE mark. To aid in this compliance process, Iradion's testing program has demonstrated that Infinity-Series lasers comply with the relevant requirements of 2014/30/EU, the Electromagnetic Compatibility Directive, as summarized in the table below.

Table 1. European Union Directives.

Applicable Standards / Norms	
2014/30/EU	Electromagnetic Compatibility Directive
2006/95/EC	Low Voltage Directive
2015/836/EU	RoHS Directive
EN 61010-1-2010	Safety Requirements for Electrical Equipment for Measurement, Control, and Laboratory Use - Part 1: General Requirements
EN 61000-6-4:2007	Radiated Emissions Group 1, Class A
EN 61000-6-4:2007	Conducted Emissions Group 1, Class A
EN 61000-6-2:2005	Electrostatic Discharge Immunity
EN 61000-6-2:2005	RF Electromagnetic Field Immunity
EN 61000-6-2:2005	Electrical Fast Transient/Burst Immunity
EN 61000-6-2:2005	Conducted RF Disturbances Immunity

After a laser or laser processing system has met the requirements of all applicable EU Directives, the product can bear the official compliance mark of the European Union as a Declaration of Conformity.

After a laser or laser processing system has met the requirements of all applicable EU Directives, the product can bear the official compliance mark of the European Union as shown in the figure below and a Declaration of Conformity is provided for the compliant component.

Declaration of Conformity

in accordance with ISO / IEC 17050-2:2010

Manufacturer's Name:	Iradion Laser, Inc.,
Manufacturer's Address:	One Technology Drive Uxbridge, MA 01569 U.S.A.

Hereby declare under our sole responsibility that the following equipment:

Product Name:	Infinity Series
Model Number:	i50, i60, i80, i100, i120 & i150

Conforms to the following Directive(s) and Standard(s):

Applicable Directive(s):

2014/30/EU	Electromagnetic Compatibility Directive
2014/35/EU	Low Voltage Directive
2011/65/EU	RoHS Directive

Applicable Standard(s):

EN 61010-1:2010	Safety Requirements for Electrical Equipment for Measurement, Control, and Laboratory Use - Part 1: General Requirements
EN 60825-1-2:2007	Safety of Laser Products
EN 61000-6-4:2007	Radiated Emissions, Group 1, Class A
EN 61000-6-4:2007	Conducted Emissions, Group 1, Class A
EN 61000-6-2:2005	Electrostatic Discharge Immunity
EN 61000-6-2:2005	RF Electronic Fields Immunity
EN 61000-6-2:2005	Electrical Fast Transient/Burst Immunity
EN 61000-6-2:2005	Conducted RF Disturbances Immunity

*Lasers are not subject to EN 60825-1:2014, *Safety of Laser Products*. Buyers of laser products are solely responsible for meeting applicable Directives and Standards for CE compliance and marking, since the final product will itself be subject to this standard.

Corporate Officer:

Ph Brak

Philippe Brak, President/CEO

MADE IN THE U.S.A

Date: 7/30/2020

Introduction

This guide provides the basic information needed to operate an Iradion Laser. This laser is designed for use while integrated within a system and is **not designed to meet CDRH requirements as a stand-alone product**. As such, the user must be aware of certain requirements before use.

CDRH

This is an OEM laser component that has been designed for integration into a functioning laser system. As a stand-alone device, it cannot be turned on and therefore does not incorporate all of the safety features required by the Center for Devices and Radiological Health (CDRH). Provisions for the incorporation of these safety features are available, and it is expected that the user will apply them and fully comply with all CDRH requirements.

Available Safety Features

The following safety features are available as electronic signals on the laser's HD-15 control connector:

Interlock	*Upon contact closure, allows the system to operate. An open connection will disallow the laser from firing.*
Key switch	*Upon contact closure, allows the laser to fire after imposing a 5-second delay. (Key switch function is program version dependent.)*
Power up in Fault	*Requires the key switch to be cycled. (Program version dependent.)*
Lase signal	*Output signal indicating the laser is firing.*
Fault signal	*Output signal indicating the malfunction of an internal component or the electronics.*
Indicator lights	*DC Power, Temp Warning, Interlock, Fault, Ready, Lase*

System Overview

Iradion Infinity CO_2 lasers are available in the following rated wattages: 50, 60, 80, 100,120 and 150 Watts. Each model has a maximum power output that exceeds their rated wattages, **all models feature identical footprints except i150 which is water cooled only and has a slightly longer dimension for cooling sensor**, so they all integrate RFPA and cooling in one package. Two connectors in the rear provide the interface to control signals, power, and returns diagnostic signals and faults signals. Connector pins and associated electronics are protected against static ESD damage. DC power is applied to the one-meter power cord.

Caution

There are no user-serviceable parts under the cover. The RF cover must be removed according to procedure; otherwise, damage could occur. The RF cover edges are RF sealed to the top heat sink, which makes it very difficult to slide off the cover. The laser may not operate properly without the cover in place. There are dangerous RF voltages under the cover that will cause serious RF burns to the skin if touched.

Caution

The lasers are waveguide lasers with a “slab” unstable optical resonator. The resulting elliptical beam is corrected by a cylindrical lens in the black extension tube mounted to the faceplate. This assembly is exactly positioned so that the beam direction is close to the original elliptical beam. Removal of the cylindrical lens assembly will result in the loss of this original alignment and will require a procedure for replacement.

Caution

The optical intensity at the cylindrical lens is **VERY** high (>6000W/cm^2).
Any contamination to the optical surface could cause runaway destruction of the lens. Do **NOT** burn materials close to the lens or leave fingerprints on the lens.

Quick Start Connection Guide

There are two connectors on the rear of the laser available for operation of the laser. The 15 pin “D” connector contains all the available connections for operation. The RJ-45 connector contains a basic set of connections.

Power Cable, All Lasers

Designation	Pin	Description	Comment
Black	-	Power Ground	10-gauge wire to power supply Ground
Red	-	Power VDC positive connection	10-gauge wire to power supply

Connector (RJ-45), All Lasers

Designation	Pin	Description	Comment
RJ-45	1	Modulation High in	TTL relative to GND or Pin 6. (Page 15)
RJ-45	2	Fault LED drive pin	Grounded Cathode.
RJ-45	3	Interlock	Grounded Interlock will enable laser.
RJ-45	4	CTL TXD	RS232 Comm line.
RJ-45	5	CTL RXD	RS232 Comm line.
RJ-45	6	Modulation low in	This line grounded or driven independently for command line isolation. (Page 15)
RJ-45	7	Ground	System GND.
RJ-45	8	Ground	System GND.

Connector (HD-15)

NOTE: The use of standard video cables with a HD-15 pin connector is not permitted when interfacing to this connector.

Designation	Pin	Description	Comment
HD-15 Pin	1	CTL TXD	RS 232 Transmit.
HD-15 Pin	2	CTL RXD	RS 232 Receive.
HD-15 Pin	3	Modulation Low In	This line grounded or driven independently for command line isolation. (Page 15)
HD-15 Pin	4	Modulation High In*	TTL signal relative to pin 3. (Page15)
HD-15 Pin	5	Ready LED Drive	Signal to drive an LED directly with grounded cathode. 5V @ 33mA, 150Ω series resistor.
HD-15 Pin	6	Key Switch in	Ground this line through key switch to arm laser.
HD-15 Pin	7	Fault LED drive pin	Signal to drive an LED directly with grounded cathode. 5V @ 33mA, 150Ω series resistor.
HD-15 Pin	8	Forward Monitor Out 1	Signal use optional. (Page 15)
HD-15 Pin	9	Reflected Monitor Out 1	Signal use optional.
HD-15 Pin	10	Forward Monitor Out 2	Not Used.
HD-15 Pin	11	Lase LED drive pin	Signal to drive an LED directly with grounded cathode. 5V @ 33mA, 150Ω series resistor.
HD-15 Pin	12	Reflected Monitor Out 2	Not Used.
HD-15 Pin	13	Interlock signal	Ground this line through switch to enable laser.
HD-15 Pin	14	Ground	System Ground.
HD-15 Pin	15	Temperature Warning LED drive pin	Signal to drive an LED directly with grounded cathode. 5V @ 33mA, 150Ω series resistor.

*The laser may be modulated at up to 140 KHz.

Caution

This unit is provided with a 1-meter length of cable for DC power. If the wire is extended in length, #10 wire must be used. Do not add more than 1-meter additional wire unless it is heavier than #8. Power supply regulation should be greater than ±2% and ripple no greater than 400 mV. No damage can occur to the laser if the DC voltage is in the range of 0 to 50 Volts; however, the laser will only operate at the specified voltage. Check your power supply before attachment and adjust it to the **specified voltage**. The software will not allow more than -2/+1.5 Volts variation including line drops at high current settings. **If output becomes intermittent and the fault light flashes on and off, the voltage drop on the power cable may be too large or the power supply may be bad. If the fault light lights up on power up, check the power supply voltage setting.**

Nominal Operating Voltages

Model Number:	i50	i60	i80	i100	i120	i150
DC Voltage:	36V	40V	45V	48V	50V	60V

"F" Type Lasers

Current production lasers with fan-cooling are marked i50F, i60F, i80F, i100F and i120F. These lasers are designed to control fan operation internally based on the operating temperature. The fan will start operating at 32°C or higher and will stop at 30°C or lower. This fan function is enabled via commands sent over the RS 232 lines. If the fans do not start when power is applied, this means that the fan function is disabled. If fans do not start with power up, this does not indicate fan malfunction! Factory fresh lasers are always shipped with the fan function disabled. See the Iradion LCC Comm Protocol_v1.5 for information on communicating with the laser control card.

"W" Type Lasers

Water-cooled lasers require water connections before operation and are marked i50W, i60W, i80W, i100W, i120W, and i150W. See "Other Connection Details" below. Only the i150W lasers can detect water flow. If the laser is operated without water flow, a fault will occur due to overheating (depending on the operating duty). Damage will not occur.

Operation of Unit

1. Mount the laser in a manner such that the beam will strike a target capable of absorbing up to 180 Watts of power. Make sure that the airflow openings are clear of any obstructions.

2. Confirm that the signal connections to the laser are secure and tight. Make sure that the power supply is correctly adjusted and is capable of delivering a minimum of the rated amps plus 2 amps margin.

3. Connect the laser power leads to DC, Red + using at least 10-gauge wire. The power supply can affect laser performance! Use a high-quality, well-regulated supply.

4. Power up the DC supply. The fans should start. (The “F” fan option, when programed, will not start the fans until the laser reaches a preset temperature.)

5. Make sure the "INTERLOCK" switch is down or off, or the interlock line is ungrounded.

6. The Key Switch line must be toggled from off to on to arm the laser. If the switch is closed when power is applied, turn it off and then on. There will be a 6 second delay before the green "READY" light lights up. **(This switch must be toggled to arm the system after power up.) NOTE: This function depends on the software version and programing. OEM lasers are shipped <u>without</u> this function.**

7. When the system arms to "READY", <u>if the tickle is being applied,</u> the "LASE" light should also light up when the interlock is enabled. The "LASE" light will get brighter as the power increases; this is normal.

8. The “Mod Hi” connection to the laser requires that the command signal contain a tickle pulse of 1 to 3 μS at 5,000 Hz when the laser is not being commanded to fire. Tickle rates of greater than 5,000 Hz will result in dangerous conditions (possible unexpected low-level emissions). When the laser is being commanded, the modulation rate can reach up to 200 KHz. **NOTE: OEM lasers may be shipped with the tickle function disabled. In this case, the user must provide the correct tickle protocol at all times.**

9. Make sure there is enough cool air available to dump the heat! Do not obstruct the air flow in any way or modify the fans. The laser should not be near heaters or other heat sources that increase the ambient fan inlet temperature.

Tickle Pulse

This option is supplied by the customer, Iradion **DOES NOT** supply the tickle pulse inside the laser.

Laser Command Signals

During laser bench testing, it is recommended that command signals be generated from an Iradion Laser Controller or properly programed pulse generator. These units can provide the tickle pulse and drive signals needed to test and operate the laser properly. Alternatively, most motion control software packages are designed to provide the proper pulse protocol.

The Modulation pins on both the "D" connector, **pins 3 (low) and 4 (high)** and the RJ-45, **pins 1 (high) and 6 (low)** are designed to allow either ***floating*** or ***grounded*** input modes.

Both the High and Low pins should be used in either case. A software setting made through the RS232 interface will either ground Modulation Low or leave it floating. **Factory setting is set to ground Modulation Low.**

It is possible to use the Modulation High pin only if the Modulation Low pin is grounded by software settings or by a physical wire; however, depending on the ground integrity of the host system and level of ground noise this may not be the best solution.

The diagram below shows the circuit of the modulation input interface:

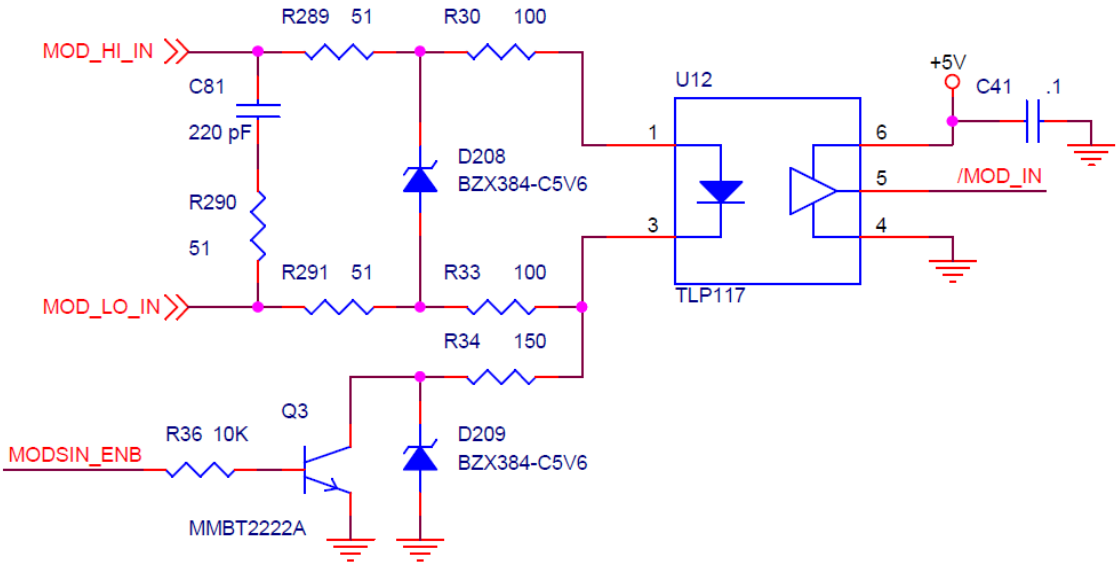

System Test

The operation of the laser is possible after the above connections are completed. To test the laser, apply power and the tickle command signal. If the software settings require a key switch, toggle it off and on. After about 6 seconds, the system will be armed.

The interlock connections must be closed to operate the system.

Fault conditions can be detected by viewing the LED indicators on the rear of the laser. The signals monitored with LEDs are:

LASER READY	Lights up when the laser controller is ready for operation.
OVERTEMP	Lights up when the RFPA is getting too hot. Faults at Temp limit.
FAULT	Lights up when the controller is in a Fault state.
LASE LED	Lights up whenever signals are delivered to the RFPA FET bias.
POWER	Lights up whenever DC power is applied.
INTERLOCK	Lights up when the interlock switch is closed.

Laser Indicator Lights

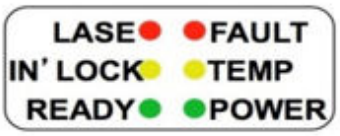

Cooling	Temp Lights	Faults
Air	55°C	65°C
Water	35°C	40°C

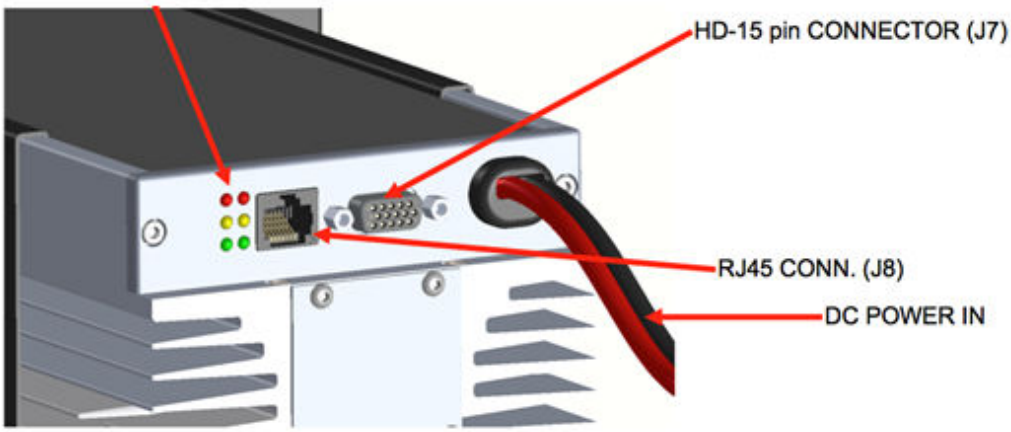

Water Cooled Laser Connections

The i50W, i60W, i80W, i100W, and i120W lasers require water cooling connections. The rear plate of these lasers is pictured below:

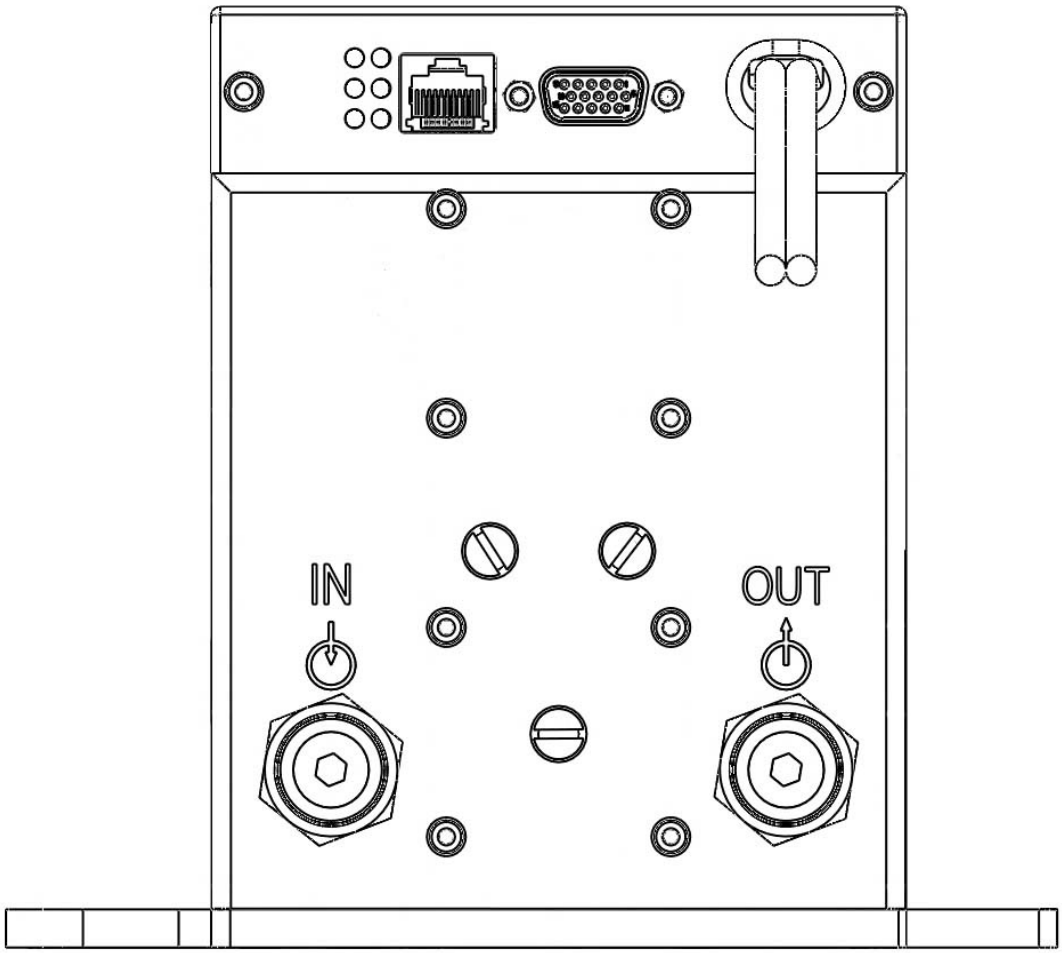

Cooling Specifications:

Flow Rate	3.78 – 7.56 liters/minute
Water Temp	Non-Condensing, 18˚C to 24˚C
Inlet Pressure	413kPa
Hardness	<250mg/liter
Heat Load	>1.5kW
pH	6 to 8
Particulate Size	<200 microns

Water Cooled Laser Connections

The i150W lasers require water cooling connections. The rear plate of these lasers is pictured below, this is different than the standard Infinity as this model has a water flow sensor:

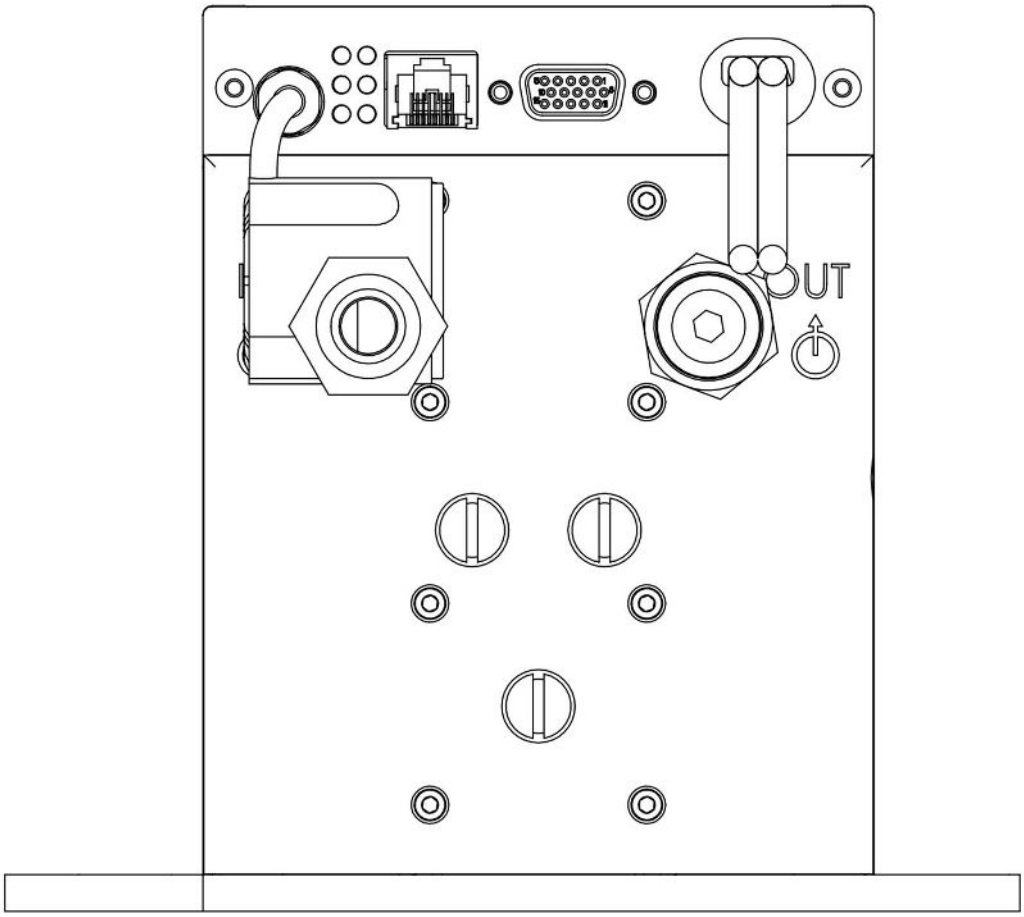

Cooling Specifications:

Flow Rate	3.78 – 7.56 liters/minute
Water Temp	Non-Condensing, 18˚C to 24˚C
Inlet Pressure	413kPa
Hardness	<250mg/liter
Heat Load	>1.5kW
pH	6 to 8
Particulate Size	<200 microns

NOTE: No condensing allowed. See Dew Point Chart below.
Connections to IN and OUT require polyethylene tubing of ½ inch outside diameter that is capable of handling pressure of up to 60 psi (4 bar). The internal cooling components of the laser are rated at 60 psi.

The following materials are used in the cooling path of the laser:

- Delrin®
- Copper
- Viton® rubber
- Stainless Steel

The recommended coolant is distilled water. Additives should be used to control corrosion and algae as recommended by the manufacturer of the chiller. Use high quality water such as distilled or deionized water to avoid scale buildup. Keep the concentration of water at above 90% relative to additives to maximize the specific heat of the coolant.

Caution

- Maintain the coolant pH above 7 to avoid damage to the copper cooling pipes.
- Never use tap water for cooling. The mineral content, temperature, or pH may cause damage.
- Never allow condensation to form on the laser.
- If condensation forms, DO NOT operate the laser until it is dry again.
- If any water leaks are detected at the laser, SHUT DOWN IMMEDIATLY!

Condensation

In some environments, where the temperature and humidity are high, the temperature setting of the cooler may need to be set higher than the specifications indicate. The chart below shows the dew point at various air temperatures and relative humidity.

To determine the dew point temperature, measure the air temperature and relative humidity. Draw a horizontal line from the air temperature (Y-axis) to the relative humidity line. Then draw a vertical line from that intersection down to the dew point temperature (X-axis).

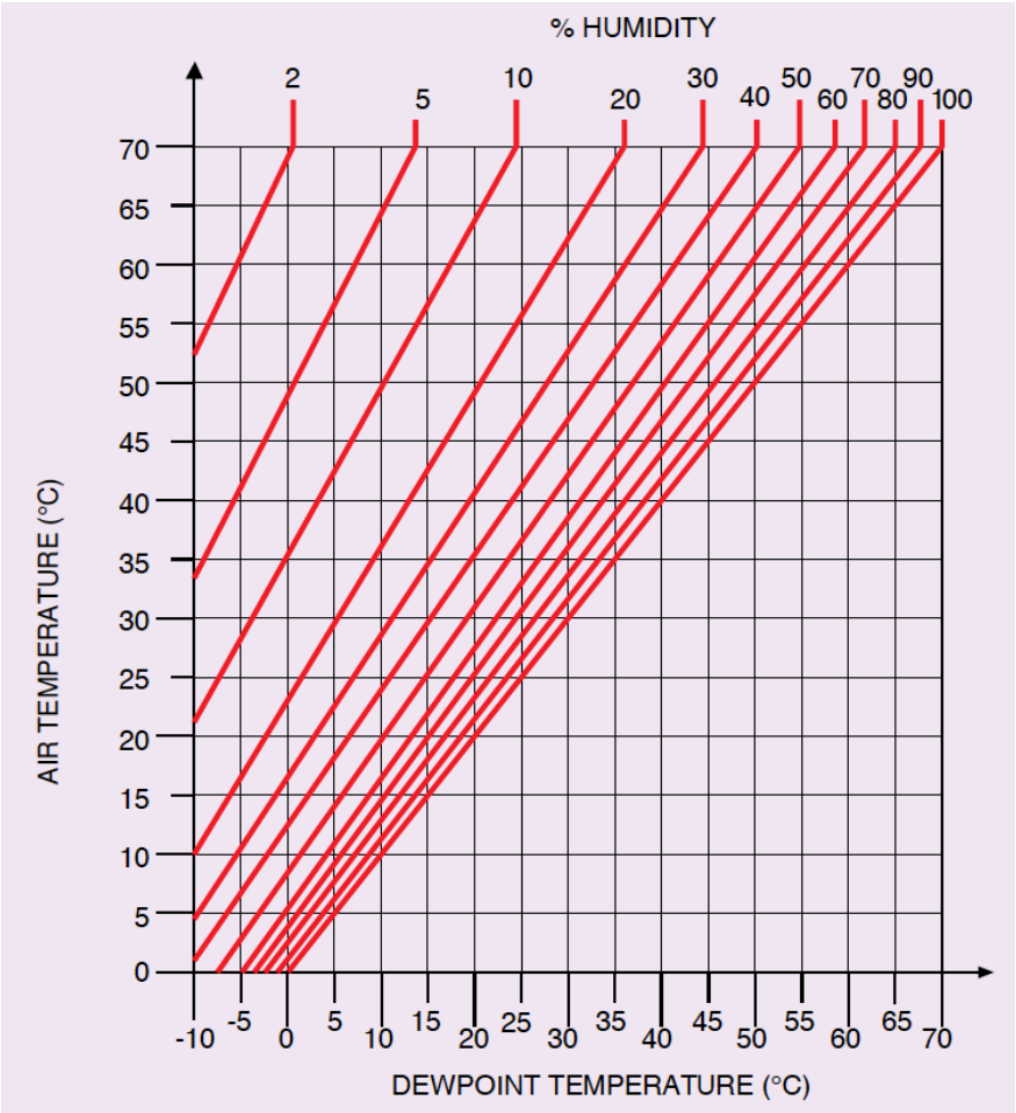

Iradion RS232 Com Diagnostics Software

The Iradion Infinity Series Lasers allow user communication to the control card through a utility software package. This package is documented in **91-3005 LCC com protocol (Customer Ver)**. Certain production functions are omitted in the "customer" version because irreversible changes could be made that would render the laser inoperable.

The software functions on Windows XP, Vista and System 7 operating systems. A properly configured com port must be available and the com port number must be known before launching the software.

The available functions are:

- Get Status
- Get Options
- Get Laser Serial Number
- Set Auto Fan Enable (if this hardware option is available)
- Set Auto Fan Disable (if this hardware option is available)
- Set Mod Low Grounded
- Set Mod Low Not Grounded
- Set Keylock Switch Disable
- Set Keylock Switch Enable
- Set Simmer Frequency (5KHz to 200KHz)
- Set Simmer Duty Cycle (0% to 20%) (factory default is 0%)
- Set Pulse Stretch (0 µS to 10µS) (factory default is 0 µS)

If the laser control card is reprogramed to a newer version, all of the optional settings must be manually reset using the Com Test Software, and the correct serial number must also be installed. A special procedure is required to restore these settings, which is not covered in this manual.

Specifications

Infinity						
Model	i50	i60	i80	i100	i120	i150
Nominal Power	50 W	60 W	80 W	100 W	120 W	150 W
Beam Quality	$M^2 \leq 1.2$	$M^2 \leq 1.2$	$M^2 \leq 1.2$	$M^2 \leq 1.2$	$M^2 \leq 1.2$	$M^2 \leq 1.2$
Beam Ellipticity	< 1.2:1	< 1.2:1	< 1.2:1	< 1.2:1	< 1.2:1	< 1.2:1
Beam Diameter (mm), $1/e^2$ @ 0m	2.5 ±0.5	2.5 ±0.5	2.5 ±0.5	2.5 ±0.5	2.5 ±0.5	2.5 ±0.5
Beam Divergence (full angle)	6 ± 1 mrad	6 ± 1 mrad	6 ± 1 mrad	6 ± 1 mrad	6 ± 1 mrad	6 ± 1 mrad
Wavelength	10.2 µm, 10.6 µm	10.2 µm, 10.6 µm	10.2 µm, 10.6 µm	10.2 µm, 10.6 µm	10.2 µm, 10.6 µm	10.2 µm, 10.6 µm
Rise Time	< 75 µs	< 75 µs	< 75 µs	< 75 µs	< 75 µs	< 75 µs
Power Stability. Fan (Water)	< ± 5 % (< ± 3 %)	< ± 5 % (< ± 3 %)	< ± 5 % (< ± 3 %)	< ± 5 % (< ± 3 %)	< ± 5 % (< ± 3 %)	(< ± 3 %)
Polarization	Random	Random	Random	Random	Random	Random
Cooling	Fan / Water	Fan / Water	Fan / Water	Fan / Water	Fan / Water	Water
Input power / Heat Load	900 W	1000 W	1125 W	1440 W	1500 W	1800 W
Input Voltage, Current	36 V / 25 A	40 V / 25 A	45 V / 25 A	48 V / 30 A	50 V / 30 A	60 V / 30 A
Frequency Range	0.1 kHz - 140 kHz	0.1 kHz - 140 kHz	0.1 kHz - 140 kHz	0.1 kHz - 140 kHz	0.1 kHz - 140 kHz	0.1 kHz - 140 kHz
Operating Temperature	5˚C - 40˚C (40˚F - 104˚F)	5˚C - 40˚C (40˚F - 104˚F)	5˚C - 40˚C (40˚F - 104˚F)	5˚C - 40˚C (40˚F - 104˚F)	5˚C - 40˚C (40˚F - 104˚F)	5˚C - 40˚C (40˚F - 104˚F)
Operating Humidity	Non-Condensing	Non-Condensing	Non-Condensing	Non-Condensing	Non-Condensing	Non-Condensing
Shipping Temperature	-10˚- 60˚ (14˚F- 140˚F)	-10˚- 60˚ (14˚F- 140˚F)	-10˚- 60˚ (14˚F- 140˚F)	-10˚- 60˚ (14˚F- 140˚F)	-10˚- 60˚ (14˚F- 140˚F)	-10˚- 60˚ (14˚F- 140˚F)
Weight	14.7 kg / 32.4 lbs.	14.7 kg / 32.4 lbs.	14.7 kg / 32.4 lbs.	14.7 kg / 32.4 lbs.	14.7 kg / 32.4 lbs.	14.7 kg / 32.4 lbs.
Dimensions (for i150) (L x W x H)	534.4 mm x 200.0 mm x 157.7 mm (water-cooled width: 176.0 mm)	534.4 mm x 200.0 mm x 157.7 mm (water-cooled width: 176.0 mm)	534.4 mm x 200.0 mm x 157.7 mm (water-cooled width: 176.0 mm)	534.4 mm x 200.0 mm x 157.7 mm (water-cooled width: 176.0 mm)	534.4 mm x 200.0 mm x 157.7 mm (water-cooled width: 176.0 mm)	643.2 mm x 176.0 mm x 157.7 mm

*Power Stability is measured after 5 minutes of warmup.
Iradion follows a policy of continuous product improvement. All specifications are subject to change without notice.

Technical Drawings - Infinity

Fan-cooled Version – Infinity i50 – i120

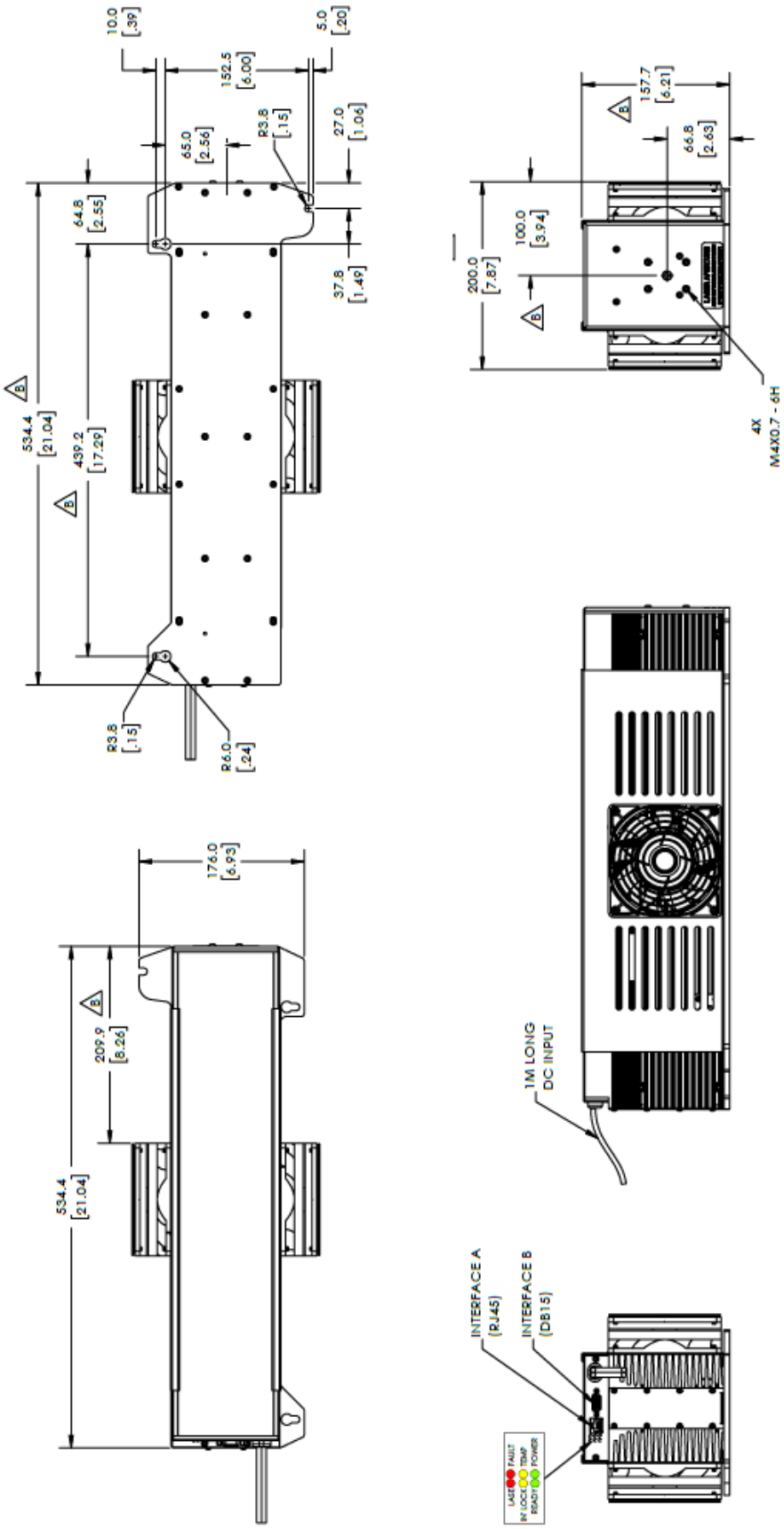

Technical Drawings – Super Infinity

Fan-cooled Version – Super Infinity i150

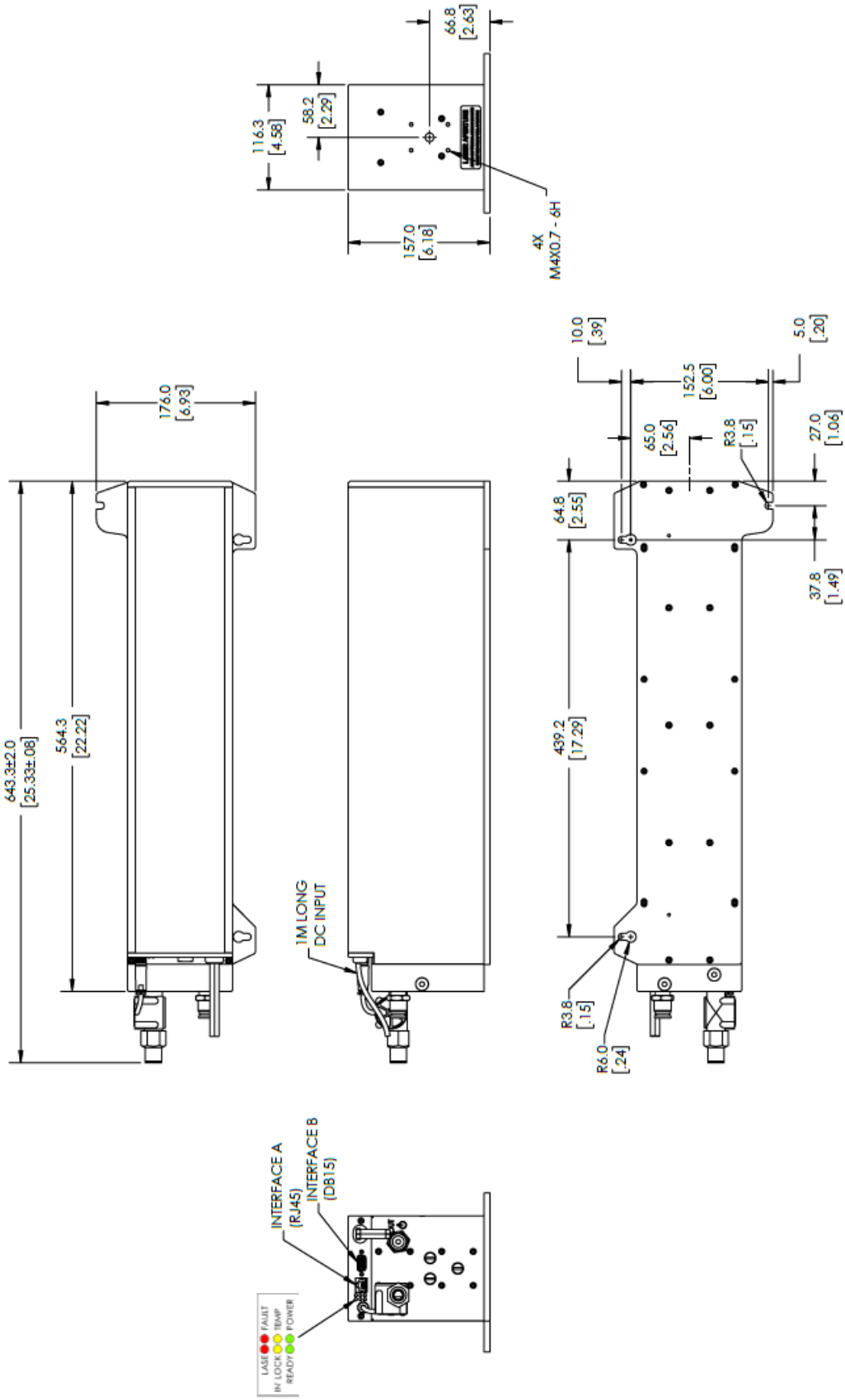

Troubleshooting

Problem	Solution
The unit is in the Ready mode but will not respond to commands.	• The Interlock Switch is open. • Mod LOW is not properly grounded.
The Over Temp Light lights.	• The RFPA heat sink is too hot for operation. • Above 55°C, a warring will also occur. • Improve cooling. • Check for intake blockage.
Laser power seems low.	• Operating temperature is very high. • The fan(s) have failed. • The heatsink is clogged with dust. • Optical damage to lens. • RFPA malfunction.
Fault light is lit.	• The laser is too hot. • Above 65°C, a Fault will also occur. • The DC voltage is outside the proper range.

Indicator Lights Details

The following chart is provided for clarity:

Fault **RED FAULT**	off	on	on	blink	on	blink	blink
Temp **YELLOW WARN**	on	on	off	on	blink	blink	off
Condition:	**A**	**B**	**C**	**D**	**E**	**F**	**G**

A = Getting hot warning, but no-fault condition.
B = System faults: too hot/water too hot.
C = System fault: over/under voltage, other faults.
D = No air flow (system in continuous fault)
E = No or low water flow, too much water flow/pressure (system in continuous fault)
F = in the D250 configuration, this state is not allowed.
G = CPLD (Complex Programmable Logic Device) failure
Note: A blinking red light is the same level of fault as a solid red light.

Iradion Laser GmbH | Justus-von-Liebig-Ring 8 | 82152 Krailling
Germany Phone: +49 (89) 899 360 - 1200
info.eu@iradionlaser.com | www.iradionlaser.com

Iradion Laser Inc. | One Technology Drive | Uxbridge, MA 01569
USA Phone: +1 (401) 762 - 5100
info.us@iradionlaser.com | www.iradionlaser.com

Patents: US 7460577 B2
US 8295319 B2
P/N: 92-3063_Rev E 9-2023